AMERICAN SPECIALTIES, INC.
441 Saw Mill River Road, Yonkers, NY 10701 (914) 476-9000

Circuit diagram label---- 0141/0144
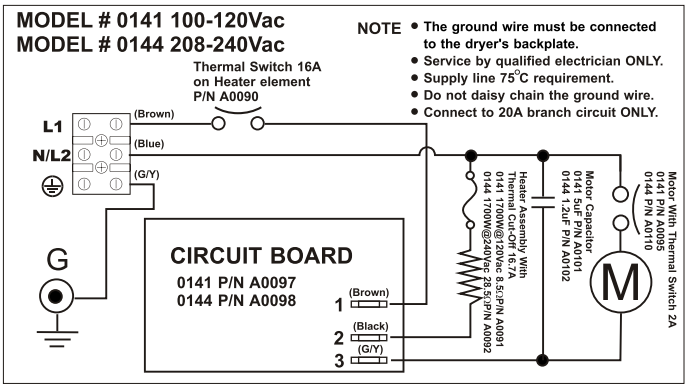
3-9/16" (90 mm) x 1-31/32" (50 mm)