AMERICAN SPECIALTIES, INC.
441 Saw Mill River Road, NY 10701
(914) 476.9000 • (914) 476.0688
www.americanspecialties.com

MODEL №:	**0533-M**
ISSUED:	01/87
REVISED:	09 APR 2012

SURFACE MOUNTED CORNER GUARD

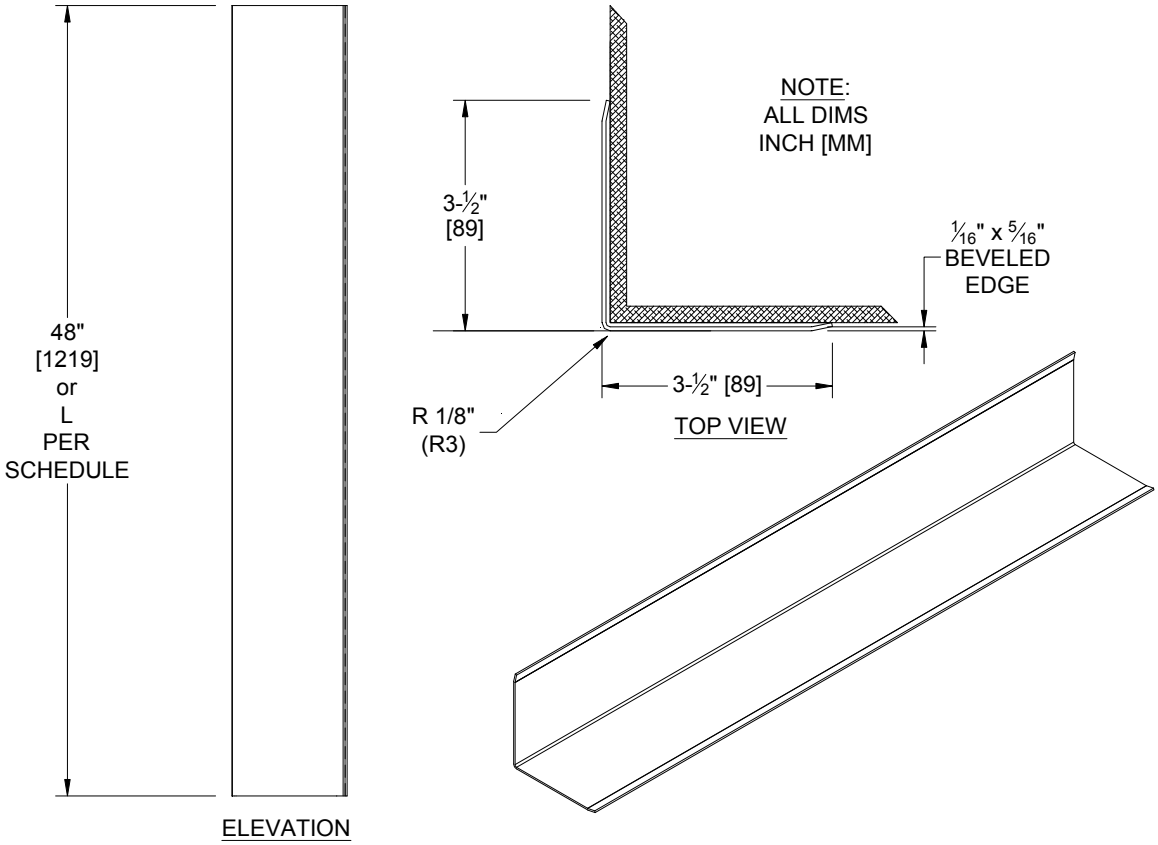

SPECIFICATION

Surface Mounted Corner Guard shall be 16 gauge type 304 stainless steel alloy 18-8 with a radiused outside corner and beveled edges. Width of guard on each side shall be 3-1/2" (89). All exposed edges shall be smooth and fully deburred. Length max 10 feet (120"{3048}) for one (1) piece as specified if not 4 feet (48"{1219}). Back surface shall be rough textured to facilitate adherence to wall surface. All exposed surfaces shall be satin finish and be protected during shipment with PVC film easily removable after installation

Surface Mounted Outside Corner Guard shall be Model № 0533-M as fabricated by American Specialties, Inc., 441 Saw Mill River Road, Yonkers, New York 10701-4913

INSTALLATION

Unit is surface mounted on finished wall by applying adhesive to back of guard and wall as per adhesive manufacturer's recommendations. Guard can be mounted flush to floor or at base height when bull-nose base is used.

ITEM	L	QTY
-1		
-2		

THIS MANUFACTURER RESERVES THE RIGHT TO MAKE CHANGES IN DESIGN OR DIMENSIONS WITHOUT FORMAL NOTICE